HR

LM Guide Separate Type (4-way Equal Load) Model HR

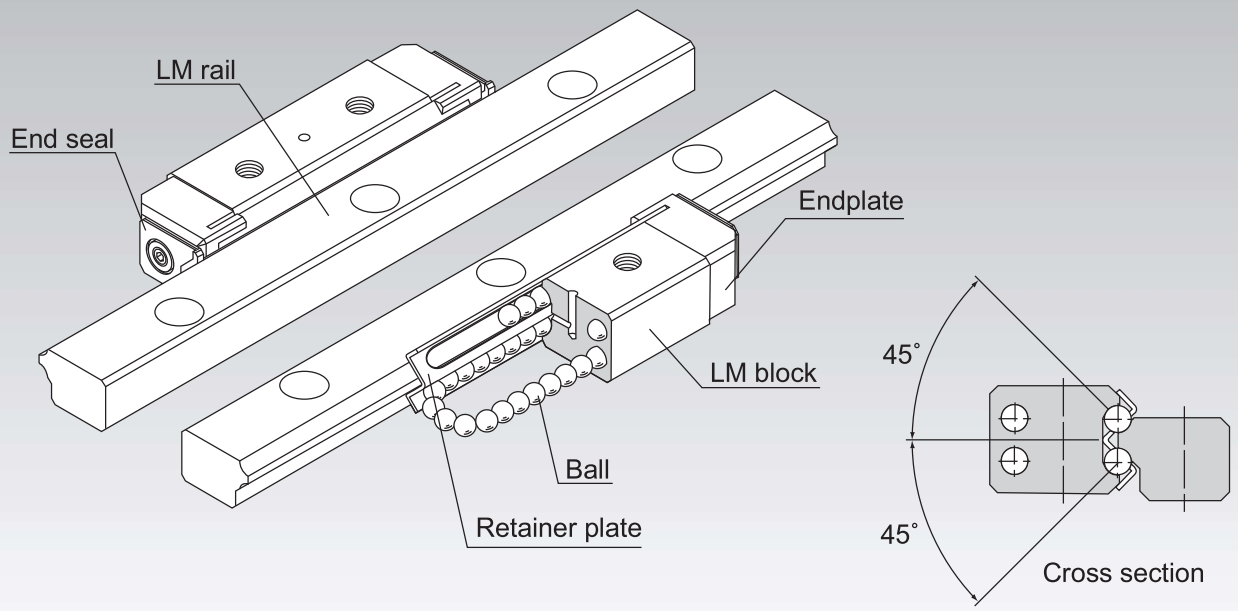

Point of Selection A1-10
Point of Design A1-468
Options A1-493
Model No. A1-559
Precautions on Use A1-565
Accessories for Lubrication A24-1
Mounting Procedure and Maintenance B1-89

Equivalent Moment Factor A1-43
Rated Loads in All Directions A1-60
Equivalent Factor in Each Direction A1-62
Example of Clearance Adjustment A1-279
Accuracy Standards A1-82
Shoulder Height of the Mounting Base and the Corner Radius A1-482
Reference Error Tolerance for the Mounting Surface A1-485
Dimensions of Each Model with Options Attached A1-507

Structure and Features

Balls roll in two rows of raceways precision-ground on an LM rail and an LM block, and endplates incorporated in the LM block allow the balls to circulate. Since retainer plates hold the balls, they do not fall off.
Because of the angular contact structure where two rows of balls rolling on the LM rail each contact the raceway at 45°, the same load can be applied in all directions (radial, reverse radial and lateral directions) if a set of LM rails and LM block is mounted on the same plane (i.e., when two LM rails are combined with an LM block on the same plane). Furthermore, since the sectional height is low, a compact and stable linear guide mechanism is achieved.
This structure makes clearance adjustment relatively easy, and is highly capable of absorbing a mounting error.

[Easy Installation]
Model HR is easier to adjust a clearance and achieve more accuracy than cross-roller guides.

[Self-adjustment Capability]
Even if the parallelism or the level between the two rails is poorly established, the self-adjustment capability through front-to-front configuration of THK's unique circular-arc grooves (DF set) enables a mounting error to be absorbed and smooth straight motion to be achieved even under a preload.

[4-way Equal Load]
When the two rails are mounted in parallel, each row of balls is placed at a contact angle of 45° so that the rated loads applied to the LM block are uniform in the four directions (radial, reverse radial and lateral directions), enabling the LM Guide to be used in various orientations and in applications.

[Sectional Dimensions Approximate to Cross-roller Guides]
Since model HR utilizes endcaps for recirculation, cage/retainer creep cannot occur as with cross-roller guides. In addition, the sectional shape of model HR is approximate to that of cross-roller guides, therefore, its components are dimensionally interchangeable with that of cross-roller guides.

[Stainless Steel Type also Available]
A special type whose LM block, LM rail and balls are made of stainless steel is also available.

Types and Features

Model HR - Heavy-load Type

Specification Table⇒A1-282

The LM blocks can be mounted from the top and the bottom.

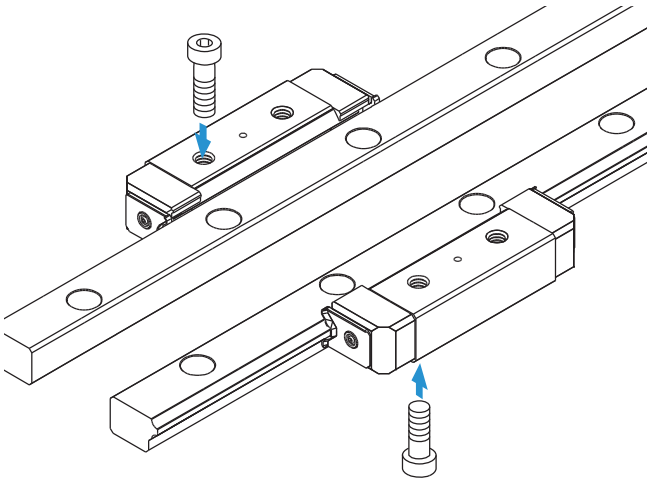

Model HR-T-Ultra-heavy Load Type

Specification Table⇒A1-282

Has the same cross-sectional shape as model HR, but has a greater overall LM block length (L) and a higher load rating.

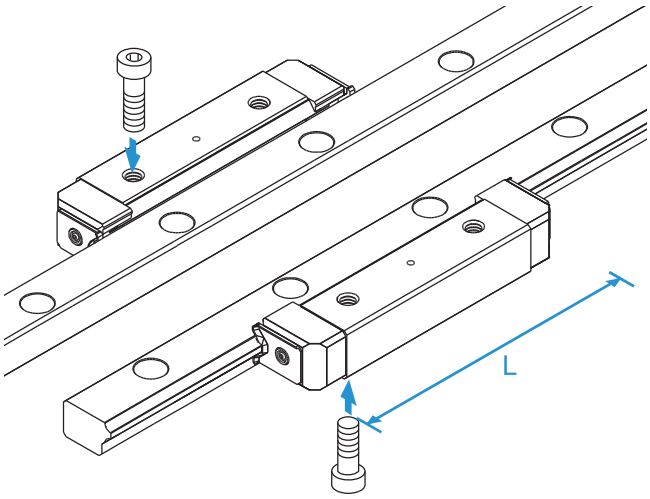

Example of Clearance Adjustment

Design the clearance adjustment bolt so that it presses the center of the side face of the LM block.

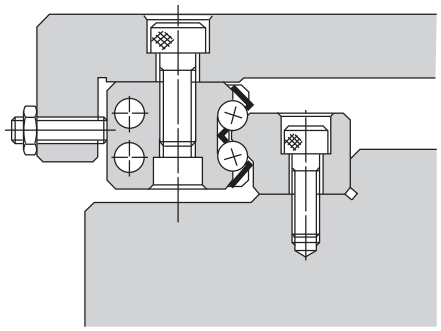

a. Using an adjustment screw
Normally, an adjustment screw is used to press the LM block.

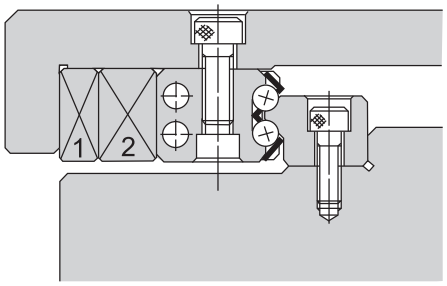

b. Using tapered gibs
When high accuracy and high rigidity are required, use tapered gibs 1) and 2).

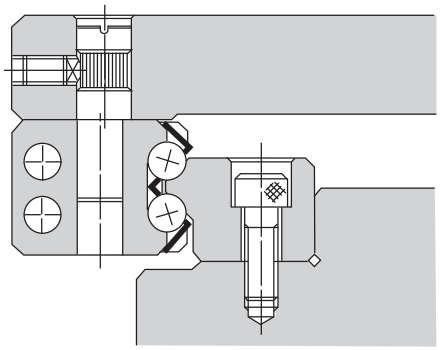

c. Using an eccentric pin
A type using an eccentric pin to adjust the clearance is also available.

Comparison of Model Numbers with Cross-roller Guides

Each type of LM Guide model HR has sectional dimensions approximate to that of the corresponding cross roller guide model.

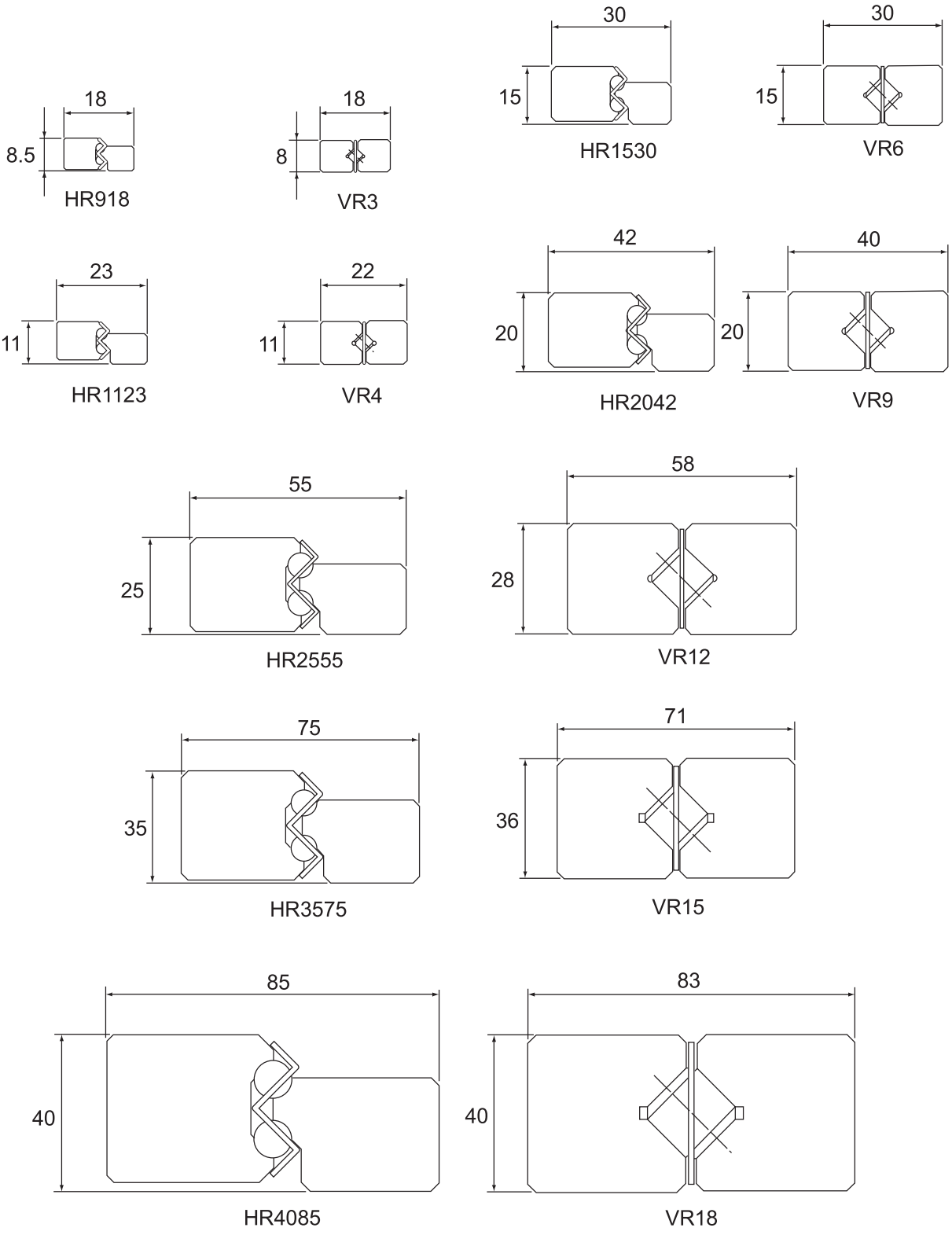

Fig.1

Models HR, HR-T, HR-M and HR-TM

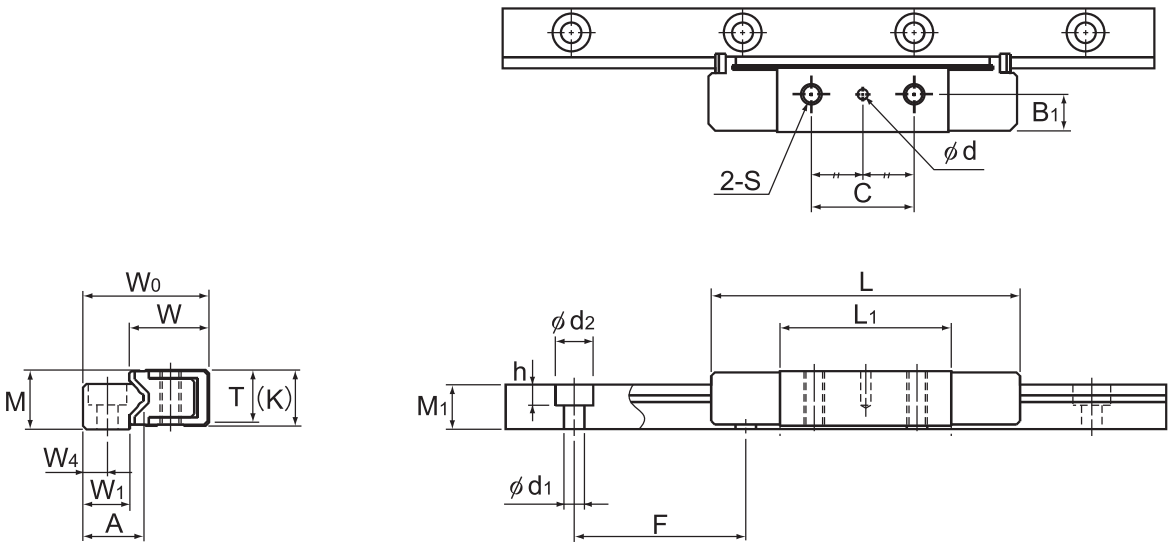

Models HR918 and 918M

Model No.	Outer dimensions				LM block dimensions									
	Height	Width		Length									Greasing hole	
	M	W	W_0	L	B_1	C	H	S	h_2	L_1	T	K	d	D_1
HR 918 HR 918M	8.5	11.4	18	45	5.5	15	—	M3	—	25	7.5	8	1.5	—
HR 1123 HR 1123M	11	13.7	23	52	7	15	2.55	M3	3	30	9.5	10	2	5
HR 1530 HR 1530M	15	19.2	30	69	10	20	3.3	M4	3.5	40	13	14	2	6.5
HR 2042 HR 2042M	20	26.3	42	91.6	13	35	5.3	M6	5.5	56.6	17.5	19	3	10
HR 2042T HR 2042TM	20	26.3	42	110.7	13	50	5.3	M6	5.5	75.7	17.5	19	3	10
HR 2555 HR 2555M	25	33.3	55	121	16	45	6.8	M8	7	80	22.5	24	3	11
HR 2555T HR 2555TM	25	33.3	55	146.4	16	72	6.8	M8	7	105.4	22.5	24	3	11

Model number coding

2 HR2555 UU M +1000L P T M

- **2**: No. of LM blocks used on the same rail
- **HR2555**: Model number
- **UU**: Contamination protection accessory symbol (*1)
- **M**: Stainless steel LM block
- **+1000L**: LM rail length (in mm)
- **P**: Accuracy symbol (*2) Normal grade (No Symbol)/High accuracy grade (H) Precision grade (P)/Super precision grade (SP) Ultra precision grade (UP)
- **T**: Symbol for LM rail jointed use
- **M**: Stainless steel LM rail

(*1) See contamination protection accessory on A1-532. (*2) See A1-82.

Note) One set of model HR means a combination of two LM rails and an LM blocks used on the same plane.

Download data by searching for the corresponding model number on the Technical Support site. https://tech.thk.com

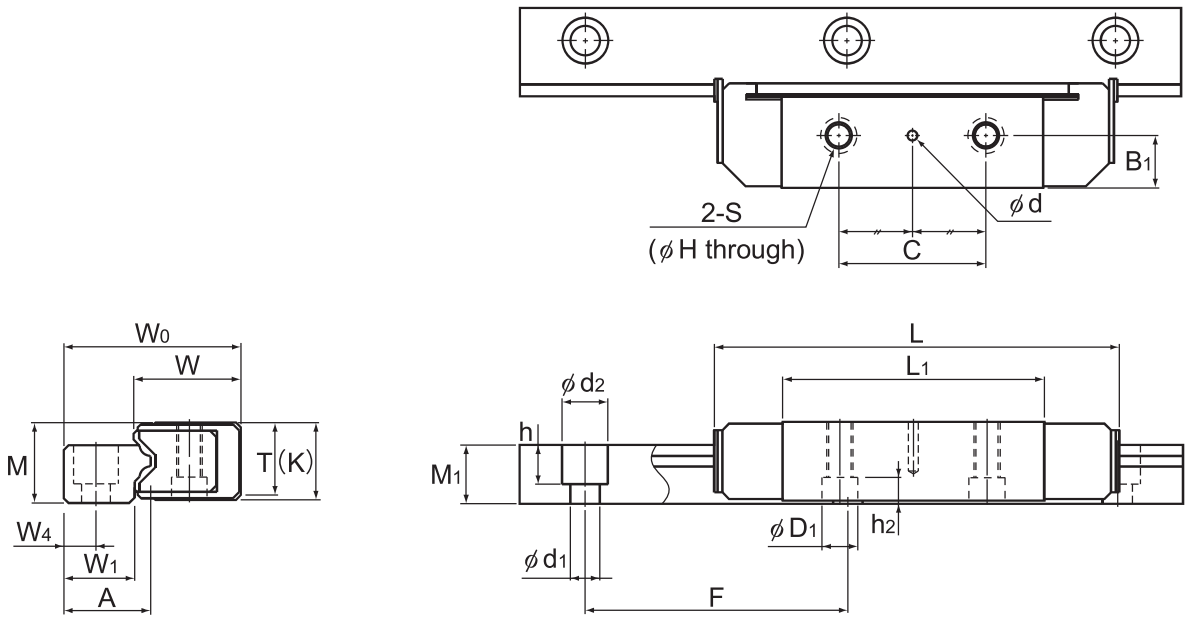

Models HR1123 to 2555M/T/TM

Unit: mm

	LM rail dimensions							Basic load rating		Static permissible moment kN•m*				Mass	
	Width			Height	Pitch		Length*	C	C_0	M_A		M_B		LM block	LM rail
	W_1	W_4	A	M_1	F	$d_1 \times d_2 \times h$	Max	kN	kN	1 block	Double blocks	1 block	Double blocks	kg	kg/m
	6.7	3.5	8.7	6.5	25	3×5.5×3	300 (300)	2.82	3.48	0.0261	0.194	0.0261	0.194	0.01	0.3
	9.5	5	11.6	8	40	3.5×6×4.5	500 (500)	4.09	4.93	0.0472	0.311	0.0472	0.311	0.03	0.5
	10.7	6	13.5	11	60	3.5×6×4.5	1600 (800)	7.56	8.77	0.112	0.733	0.112	0.733	0.08	1
	15.6	8	19.5	14.5	60	6×9.5×8.5	2200 (1000)	17	18.2	0.325	2.01	0.325	2.01	0.13	1.8
	15.6	8	19.5	14.5	60	6×9.5×8.5	2200 (1000)	20.8	24.3	0.56	3.16	0.56	3.16	0.26	1.8
	22	10	27	18	80	9×14×12	3000 (1000)	33.2	35.1	0.897	5.04	0.897	5.04	0.43	3.2
	22	10	27	18	80	9×14×12	3000 (1000)	40	45.9	1.49	7.8	1.49	7.8	0.5	3.2

Note) The maximum length under "Length*" indicates the standard maximum length of an LM rail. (See A1-286.)
Static permissible moment* 1 block: the static permissible moment value with two LM rails, one LM block per rail, used on the same plane
Double blocks: static permissible moment when two LM blocks are in close contact with each other on two LM rails used on the same plane
A moment in the M_C direction can be received if two rails are used in parallel. However, since it depends on the distance between the two rails, it has been omitted.
Total block length L : The total block length L shown in the table is the length with the dust-proof parts (code: UU).
The M in the model number symbol indicates that the LM block, LM rail and balls are made of stainless steel.
The stainless steel provides excellent corrosion and environmental resistance.

Options⇒A1-493

Models HR, HR-T, HR-M and HR-TM

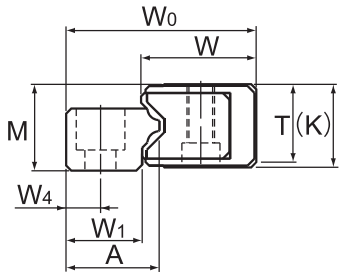

Model No.	Outer dimensions				LM block dimensions									
	Height	Width		Length									Greasing hole	
	M	W	W_0	L	B_1	C	H	S	h_2	L_1	T	K	d	D_1
HR 3065 HR 3065T	30	40.3	65	145 173.5	19	50 80	8.6	M10	9	90 118.5	27.5	29	4	14
HR 3575 HR 3575T	35	44.9	75	154.8 182.5	21.5	60 92.5	10.5	M12	12	103.8 131.5	32	34	4	18
HR 4085 HR 4085T	40	50.4	85	177.8 215.9	24	70 110	12.5	M14	13	120.8 158.9	36	38	4	20
HR 50105 HR 50105T	50	63.4	105	227 274.5	30	85 130	14.5	M16	15.5	150 197.5	45	48	5	23
HR 60125	60	74.4	125	329	35	160	18	M20	18	236	55	58	5	26

Model number coding

2 HR4085T UU +1500L P T

- **2**: No. of LM blocks used on the same rail
- **HR4085T**: Model number
- **UU**: Contamination protection accessory symbol (*1)
- **+1500L**: LM rail length (in mm)
- **P**: Accuracy symbol (*2)
  Normal grade (No Symbol)/High accuracy grade (H)
  Precision grade (P)/Super precision grade (SP)
  Ultra precision grade (UP)
- **T**: Symbol for LM rail jointed use

(*1) See contamination protection accessory on A1-532. (*2) See A1-82.

Note) One set of model HR means a combination of two LM rails and an LM blocks used on the same plane.

Download data by searching for the corresponding model number on the Technical Support site. https://tech.thk.com

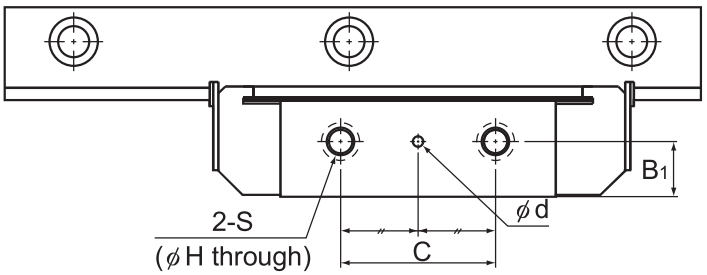

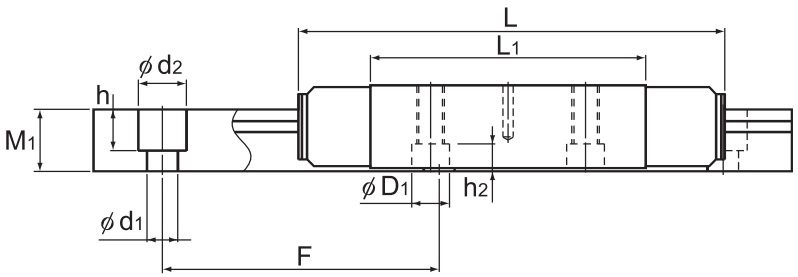

Unit: mm

	LM rail dimensions							Basic load rating		Static permissible moment kN•m*				Mass	
	Width			Height	Pitch		Length*	C	C_0	M_A		M_B		LM block	LM rail
	W_1	W_4	A	M_1	F	$d_1 \times d_2 \times h$	Max	kN	kN	1 block	Double blocks	1 block	Double blocks	kg	kg/m
	25	12	31.5	22.5	80	9×14×12	3000	42.6 51.5	44.4 58.1	1.27 2.12	7.71 11.7	1.27 2.12	7.71 11.7	0.7 0.9	4.6
	30.5	14.5	37	26	105	11×17.5×14	3000	53.5 64.4	54.8 71.7	1.75 2.91	10.1 15.2	1.75 2.91	10.1 15.2	1.05 1.4	6.4
	35	16	42.5	29	120	14×20×17	3000	78.8 95.1	78.9 103	3.02 5.02	16.6 25.7	3.02 5.02	16.6 25.7	1.53 1.7	8
	42	20	51.5	37	150	18×26×22	3000	127 153	123 161	5.89 9.81	33.1 51.3	5.89 9.81	33.1 51.3	3.06 3.5	12.1
	51	25	65	45	180	22×32×25	3000	226	232	16	89.5	16	89.5	7.5	19.3

Note) The maximum length under "Length*" indicates the standard maximum length of an LM rail. (See A1-286.)
Static permissible moment* 1 block: the static permissible moment value with two LM rails, one LM block per rail, used on the same plane
Double blocks: static permissible moment when two LM blocks are in close contact with each other on two LM rails used on the same plane
A moment in the M_C direction can be received if two rails are used in parallel. However, since it depends on the distance between the two rails, it has been omitted.
Total block length L : The total block length L shown in the table is the length with the dust-proof parts (code: UU).
The M in the model number symbol indicates that the LM block, LM rail and balls are made of stainless steel.
The stainless steel provides excellent corrosion and environmental resistance.

Options⇒A1-493

Standard Length and Maximum Length of the LM Rail

Table1 shows the standard lengths and the maximum lengths of model HR variations. If the maximum length of the desired LM rail exceeds them, jointed rails will be used. Contact THK for details. For special rail lengths, it is recommended to use a value corresponding to the G,g dimension from the table. As the G,g dimension increases, this portion becomes less stable, and the accuracy performance is severely impacted.

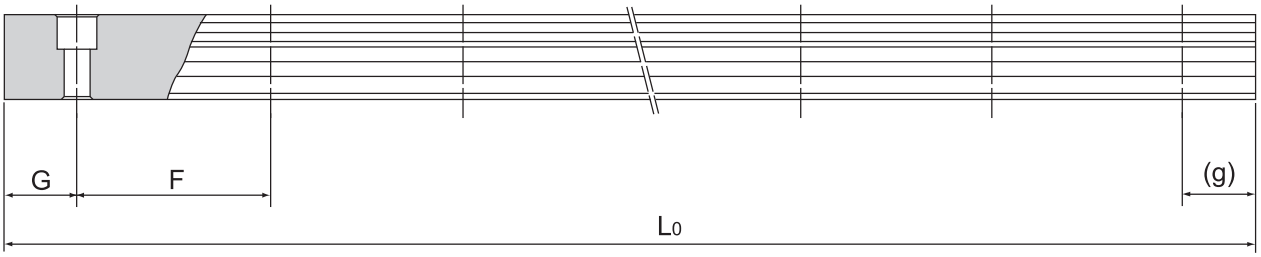

Table1 Standard Length and Maximum Length of the LM Rail for Model HR Unit: mm

Model No.	HR 918	HR 1123	HR 1530	HR 2042	HR 2555	HR 3065	HR 3575	HR 4085	HR 50105	HR 60125
LM rail standard length (L_o)	70 120 220 295	110 230 310 390	160 280 340 460 580	220 280 340 460 640	280 440 600 760 1000 1240	280 440 600 760 1000 1240	570 885 1200 1620 2040 2460	780 1020 1260 1500 1980 2580	1270 1570 2020 2620	1530 1890 2250 2610
Standard pitch F	25	40	60	60	80	80	105	120	150	180
G,g	10	15	20	20	20	20	22.5	30	35	45
Max length	300 (300)	500 (500)	1600 (800)	2200 (1000)	3000 (1000)	3000	3000	3000	3000	3000

Note1) The maximum length varies with accuracy grades. Contact THK for details.
Note2) If jointed rails are not allowed and a greater length than the maximum values above is required, contact THK.
Note3) The figures in the parentheses indicate the maximum lengths of stainless steel made models.

Accessories

[Dedicated Mounting Bolt]

Normally, when mounting the LM block to adjust a clearance, use the tapped hole provided on the LM block to secure it as shown in Fig.2.
The holes of the bolt (d_1 and D_1) must be machined so that they are greater by the adjustment allowance.
If it is inevitable to use the mounting method as indicated by Fig.3 for a structural reason, the dedicated mounting bolt as shown in Fig.4 is required for securing the LM block. Be sure to specify that the dedicated mounting bolt is required when ordering the LM Guide.

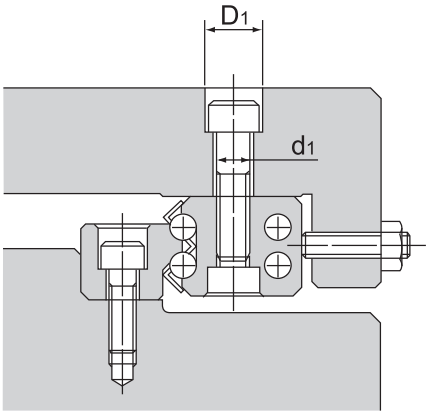

Fig.2

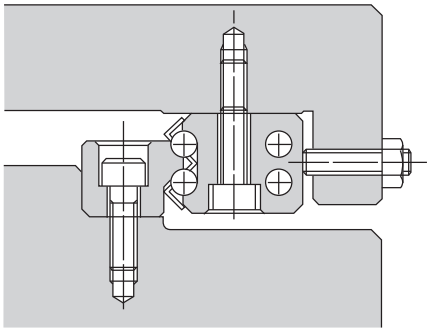

Fig.3

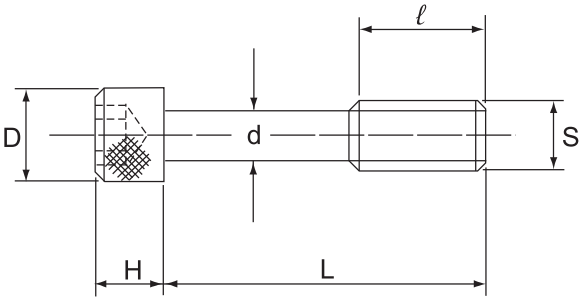

Fig.4

Table2 Dedicated Mounting Bolt Unit: mm

Model No.	S	d	D	H	L	ℓ	Supported model number
B 3	M3	2.4	5.5	3	17	5	HR 1530
B 5	M5	4.1	8.5	5	22	7	HR 2042
B 6	M6	4.9	10	6	28	9	HR 2555
B 8	M8	6.6	13	8	34	12	HR 3065
B 10	M10	8.3	16	10	39	15	HR 3575
B 12	M12	10.1	18	12	45	18	HR 4085
B 14	M14	11.8	21	14	55	21	HR 50105
B 16	M16	13.8	24	16	66	24	HR 60125

Greasing Hole

[Lubrication for Model HR]

The LM block has a greasing hole in the center of its top face. To provide lubrication through this hole, the table must be machined to also have a greasing hole as shown in Fig.5 and attach a grease nipple or the like. When using oil lubrication, it is necessary to identify the lubrication route. Contact THK for details.

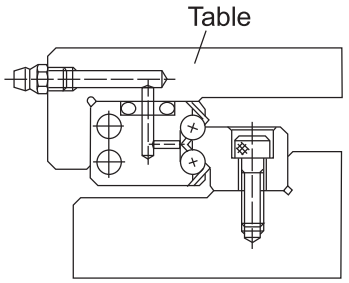

Fig.5 Example of Machining a Greasing Hole